SML ISUZU LTD ZT54 SM B EL WB

Manufacturing	: 04/2017
No. Of Owners	: 1
Duplicate Keys	: N/A
KM Driven	: N/A
Fuel Type	: Diesel
Reg State	: Uttar Pradesh
Reg City	: Ghaziabad
Insurance Expiry	: 20/05/2026
RC Availability	: Yes
Permits	: National Permit State Permit
NP Date Validity	: 03/06/2026
SP Date Validity	: 03/06/2027

VEHICLE DETAILS

Registration Number	**UP 14GT0868**	RTO	**GHAZIABAD, UP**
City	**GHAZIABAD**	RTO NOC Issued	**N/A**
Inspection At	**On-Site**	Under Hypothecation	**No**
Branch	**Delhi**	CNG/LPG Instalment	**No**
To be scrapped	**No**	Chassis Number Embossing	**Yes**
Manufacturing	**04/2017**	PUC Validity	**10/08/26**
Registration	**05/2017**	MV Tax (Upto)	**30/04/26**
Lifespan Remaining	**02 Months, 01 Years**	Fitness (Upto)	**02/10/2025**
RC Mismatch if any	**No**		

SUMMARY

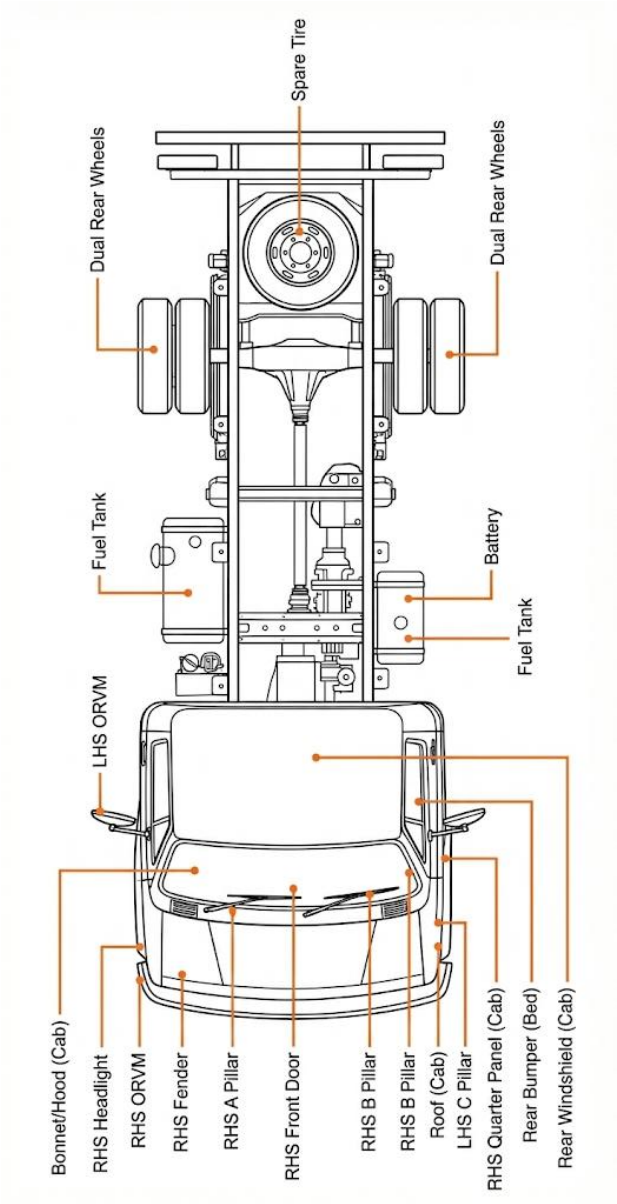

Exterior + Tyres

Part	Sub-Part	Status	Remarks / Condition
Bumper	Front / Rear	!	Front Bumper Slightly rusted Rear Bumper Rusted and slightly damaged
Cabin Panels	LHS / RHS	!	Right panel rusted
Bonnet / Hood	—	✓	

Roof (Cab)	—	!	Slight bent
Fender	LHS / RHS	✓	
Doors	LHS / RHS	✓	
Windshield	Front / Rear	!	Slightly damaged
Pillars	A / B / C	✓	
Load Body Floor	—	✓	
Side Panels	—	✓	
Tailgate	—	✓	
Chassis Visible Area	—	✓	
Tyre	1	✓	80-90%
Tyre	2	✓	80-90%
Tyre	3	!	10-20%
Tyre	4	!	10-20%
Tyre	5	✓	30-40%
Tyre	6	✓	30-40%
Tyre	Spare	-	N/A
Wheels / Rims	—	✓	

Electricals + Interior

Part	Sub-Part	Status	Remarks / Condition
Battery	—	✓	
Wiring Harness	—	✓	
Headlights	LHS / RHS	✓	
Tail Lamps	LHS / RHS	✓	
Indicators	—	✓	
Horn	—	✓	
Instrument Cluster	—	✓	
Warning Lights	—	✓	
Dashboard	—	✓	
Seats	Driver / Co-driver	✓	
Seat Belts	—	✓	
Cabin Fan / Blower	—	✓	
Wipers	—	✓	

Engine + Transmission

Part	Sub-Part	Status	Remarks / Condition
Cold Start	—	✓	

Idling	—	✓	
Blow-by	—	✓	
Exhaust Smoke	—	✓	
Engine Oil	—	✓	
Coolant	—	✓	
Oil Leakage	—	✓	
Fuel Injection	—	✓	
Turbocharger	—	✓	
Clutch	—	✓	
Gear Shifting	—	✓	
Gearbox Noise	—	✓	
Propeller Shaft	—	✓	
Differential	—	✓	

Steering / Suspension + Brakes

Part	Sub-Part	Status	Remarks / Condition
Steering Free Play	—	✓	
Steering Box	—	✓	
Kingpin / Ball Joint	—	✓	

Leaf Springs	—	✓	
U-Bolts & Clamps	—	✓	
Shock Absorbers	—	✓	
Front Axle	—	✓	
Brake Pedal Feel	—	✓	
Brake Pull	—	✓	
Brake Lines	—	✓	
Parking Brake	—	✓	

Vehicle Photo Documentation Sheet

PROFILE	PHOTOGRAPH
1	
2	

3	
4	

5	
6	

7	
8	

9	
10	

11	
12	

TYRE 1	
TYRE 2	

TYRE 3	
TYRE 4	

TYRE 5	
TYRE 6	